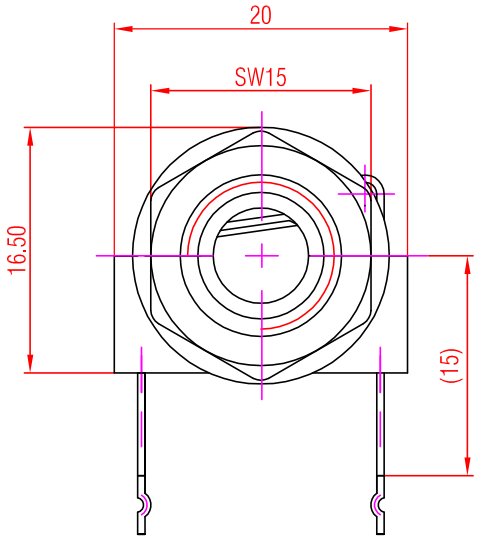

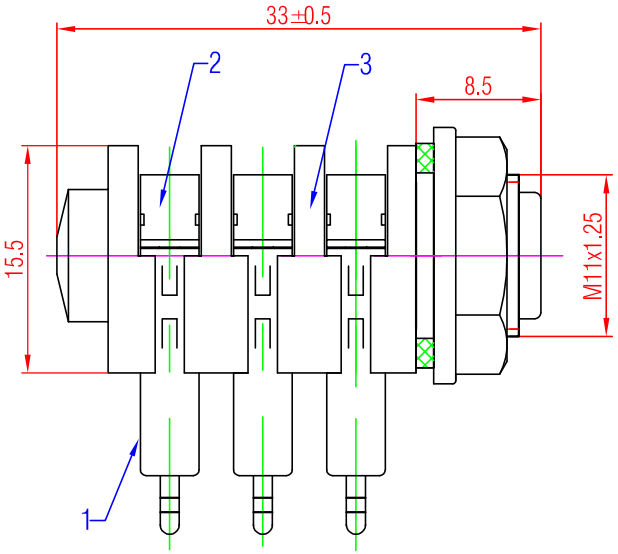

PCB Layout (Component Side)

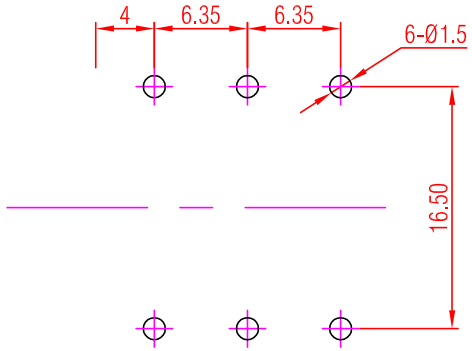

Washer

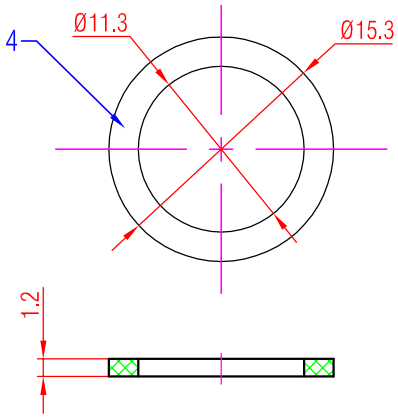

Nut

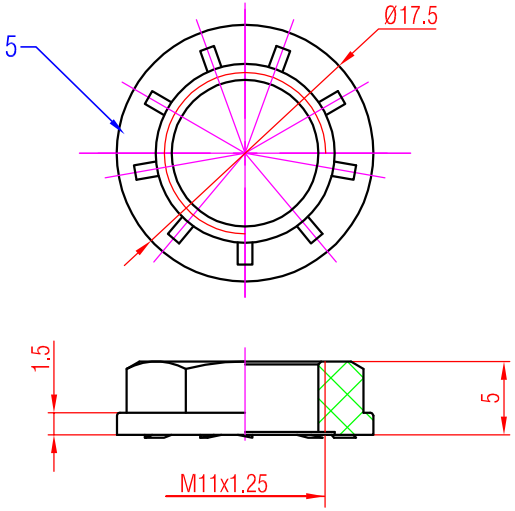

Panel Cut Out (Rear Side)

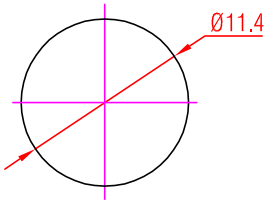

Note:
1. All dimensions in mm.
2. Tolerances not specified is ±0.10mm.
3. Radius not specified is R=0.20mm.

No.	Part Name	Material
5	Nut	PA6 + 30% GF (Black)
4	Washer	ABS (Black)
3	Housing	PA6 + 30% GF (Black)
2	Switched Contact	Phosphor Bronze,Tin-Cer Plated
1	Normalizing Contact	Brass, Tin-Cer Plated

Rev.	Revision Details	Date	Name

Material:	Scale: 2 : 1		Date: / Name:
		Designer:	2015.05.28 James
		Checked:	2015.05.28 Abraham
		Approved:	
Title: 1/4" Phone Stereo Jacks		Replaced By:	1
		Replaces:	1
		Drawing No.:	